Transformer No.	MED2000	1 -fase / -con. 50 Hz
Customer	MEDICAL ISOLATION STANDARD	Note
Assembly Comp.	CENTER POTTED	Date/sign. 09-09-2009 KEVIN

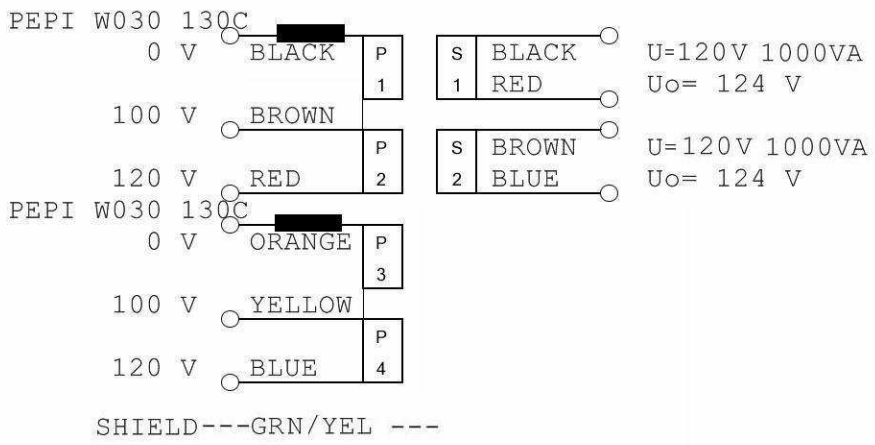

Marking

MADE BY AMGIS LLC USA
TRANSFORMER P/N MED2000
PRIM.2*(0-100-120V) 50/60HZ 2066VA
SEC.2*120V 2*1000VA

Changed from

Changed to

Tests. Uo. Tolerance, ± 3 %	Iomax: 301.4 (mA) 100 V over P1.	Isol: 4K V
Dimensions: Max H: 4.0" (mm)	Max. Ø: 9.0" (mm)	Terminals: 250 mm

(mm)

Center potted with 1/2" dia hole
1 pc neoprene gasket 9" dia x 1/2" ID x 1/8" thk

Shipping Weight: 32 lbs